Sauls Wharf House
Crittens Road
Great Yarmouth
Norfolk
NR31 0AG

Telephone +44 (0)1493 602602
Email:sales@midasdisplays.com
Email:tech@midasdisplays.com
www.midasdisplays.com

MC21609A12W-VNMLY	2 x 16	9mm Character Height	VA Module
Specification			
Version: 1		Date: 29/09/2016	
Revision			

Display Features			
Character Count	2 x 16		
Appearance	Yellow on Black		
Logic Voltage	5V		
Interface	Parallel		
Font Set	English / Japanese		
Display Mode	Transmissive		
Character Height	9.22mm		
LC Type	VATN		
Module Size	122.00 x 44.00 x 13.60 mm		
Operating Temperature	-20°C ~ +70°C		
Construction	COB	Box Quantity	Weight / Display
LED Backlight	Yellow	---	---

RoHS compliant

DESIGN • MANUFACTURE • SUPPLY

* - For full design functionality, please use this specification in conjunction with the RW1063 specification. (Provided Separately)

Display Accessories	
Part Number	**Description**
MCCMDB-16SIL	LCD Interconnect board, can be driven from either a PC or a single Board computer with a USB output.
MCCBL1A16SLIP -16DILS-150	16 Way, Single in-line to Dual In-line connector Cable.
MCCBL1A16DLIP -16DILS-150	16 Way, Single in-line to Single In-line connector Cable.

Optional Variants		
Fonts	**Appearances**	**Voltage**
	Blue on Black Red on Black White on Black Green on Black	

Mechanical Specifications					
Module Size	122.00 x 44.00 x 13.60 (With Backlight)				W x H x D mm
Viewing Area	99.00 x 24.00	W x H mm	Hole-to-Hole	115.00 x 37.00	W x H mm
Character Size	4.80 x 9.22	W x H mm	Character Pitch	5.96 x 10.78	W mm
Dot Size	0.92 x 1.10	W x H mm	Dot Pitch	0.97 x 1.16	W x H mm

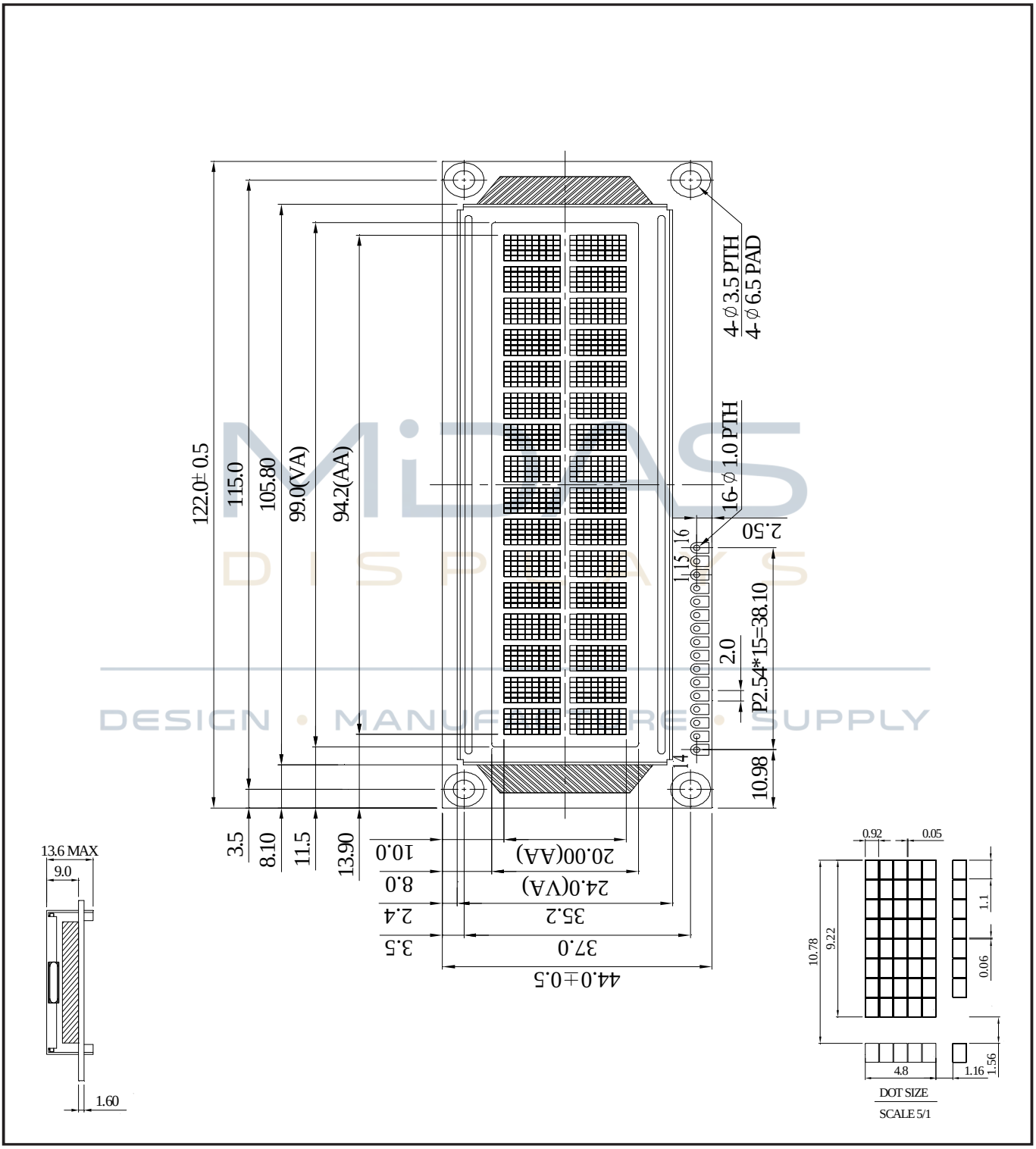

MIDAS DISPLAYS
DESIGN • MANUFACTURE • SUPPLY

MC21609A12W-VNMLY	2 x 16	9mm Character Height	VA Module
Specification			
Version: 1		Date: 29/09/2016	
Revision			

Pin Layout

PI	SYMBOL	DESCRIPTION	REMARKS
1	Vss	GND	
2	Vdd	Power supply for LCM	5.0V
3	VO	Contrast Adjustment	
4	RS	Instruction Code	
5	R/W	Data Read / Write	
6	E	Chip Enable Signal	
7	DB0	Data bus line	
8	DB1	Data bus line	
9	DB2	Data bus line	
10	DB3	Data bus line	
11	DB4	Data bus line	
12	DB5	Data bus line	
13	DB6	Data bus line	
14	DB7	Data bus line	
15	Vee	Negative Voltage Output	
16	K	LED-	

MIDAS DISPLAYS
DESIGN • MANUFACTURE • SUPPLY

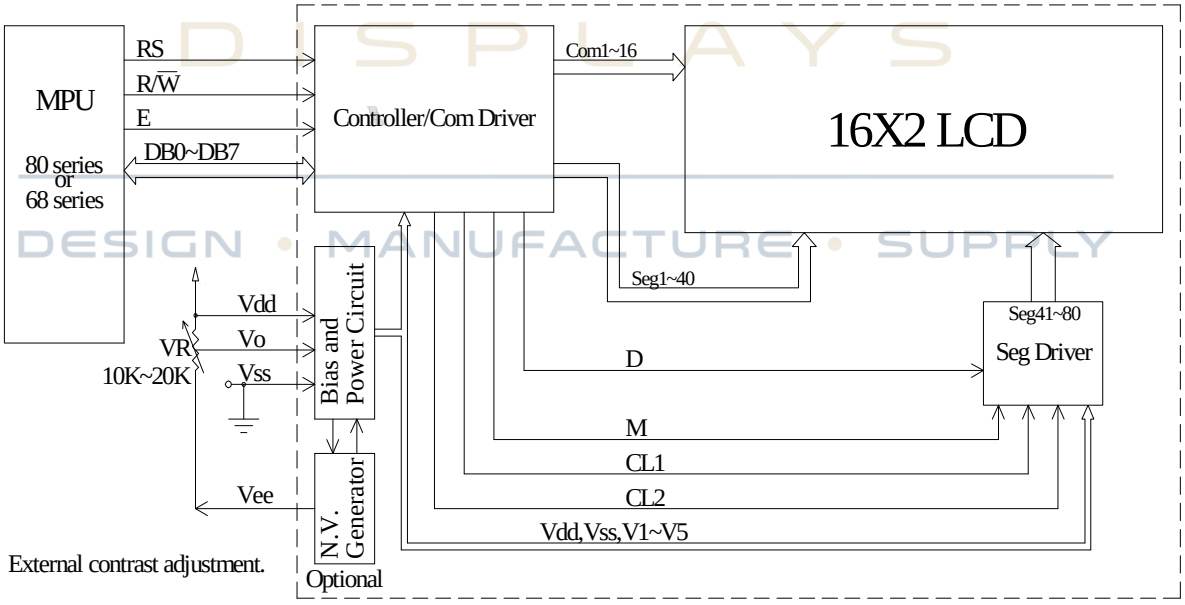

Character located	1	2	3	4	5	6	7	8	9	10	11	12	13	14	15	16
DDRAM address	00	01	02	03	04	05	06	07	08	09	0A	0B	0C	0D	0E	0F
DDRAM address	40	41	42	43	44	45	46	47	48	49	4A	4B	4C	4D	4E	4F

Font Map

Upper 4bit / Lower 4bit	LLLL	LLLH	LLHL	LLHH	LHLL	LHLH	LHHL	LHHH	HLLL	HLLH	HLHL	HLHH	HHLL	HHLH	HHHL	HHHH
LLLL	CG RAM (1)															
LLLH	(2)															
LLHL	(3)															
LLHH	(4)															
LHLL	(5)															
LHLH	(6)															
LHHL	(7)															
LHHH	(8)															
HLLL	(1)															
HLLH	(2)															
HLHL	(3)															
HLHH	(4)															
HHLL	(5)															
HHLH	(6)															
HHHL	(7)															
HHHH	(8)															

MIDAS DESIGN MANUFACTURER SUPPLY

MC21609A12W-VNMLY	2 x 16	9mm Character Height	VA Module
Specification			
Version: 1		Date: 29/09/2016	
Revision			

Absolute Maximum Ratings

Item	Symbol	Condition	Min	Typ	Max	Unit
Power Supply (LOGIC)	Vdd	25 °C	-0.3	---	5.5	V
Power Supply (LCD)	V0	25 °C	Vss-0.3	---	Vss +7.0	V
Input Voltage	Vin	25 °C	-0.3	---	Vdd+0.3	V
Operating Temperature	Vopr	---	-20	---	70	°C
Storage Temperature	Vstg	---	-30	---	80	°C

Electronic Characteristics

Item	Symbol	Condition	Minimum	Typical	Maximum	Unit
Input Voltage High	V_{IH}	---	2.50	---	V_{DD}	V
Input Voltage Low	V_{IL}	---	-0.3	---	0.60	V
Output Voltage High	V_{OH}	---	3.90	---	Vdd	V
Output Voltage Low	V_{OL}	---	---	---	0.40	V
Supply Voltage Logic	V_{DD} ~ V_{SS}	---	4.50	5.00	5.50	V
Supply Voltage LCD	V_{DD} ~ V_0	Ta=25°C	6.40	6.60	6.80	V
Supply Current	I_{DD}	V_{DD}=5.0V	---	1.00	---	mA

LCD Characteristics

For STN/FSTN LCD Panel Types

Item	Symbol	Condition	Minimum	Typical	Maximum	Unit
Viewing Angle	Φ2 – Φ1	CR ≥ 10	---	60	---	ψ=180°
	Θ	---	---			
Contrast Ratio	CR	---	10	---	---	---
Response Time (Rise)	TR	---	---	300	350	ms
Response Time (Fall)	TF	---	---	300	350	ms

LED Characteristics

Item	Symbol	Condition	Minimum	Typical	Maximum	Unit
Supply Current	ILED	V=5.0V	---	128	160	mA
Supply Voltage	V	---	4.90	5.00	5.10	V
Reverse Voltage	VR	---	---	---	5	V
Luminance (Without LCD)	IV	ILED=128mA	960	1200	---	Cd/m^2
Wave Length	λp	ILED=128mA	567	570	575	---
LED Life Time	---	ILED=128mA	---	50K	---	Hour

MIDAS DESIGN • MANUFACTURE SUPPLY