Sauls Wharf House
Crittens Road
Great Yarmouth
Norfolk
NR31 0AG

Telephone +44 (0)1493 602602
Email:sales@midasdisplays.com
Email:tech@midasdisplays.com
www.midasdisplays.com

MDT238000	3840x2160	EDP Interface	TFT Module
Specification			
Version: 1		Date: 17/01/2021	
Revision			
1	15/01/2021	First issue	

Display Features	
Display Size	23.8”
Resolution	3840x2160
Orientation	Landscape
Appearance	RGB
Logic Voltage	5V
Interface	EDP
Brightness	1000 cd/m^2
Touchscreen	---
Module Size	544.70 x 323.20 x 13.80 mm
Operating Temperature	-10°C ~ +50°C
Pinout	30 way connector
Pitch	0.5 mm

RoHS compliant

Created By	Checked By
CL	TSB
Box Quantity	Weight / Display
---	---

MiDAS DISPLAYS
DESIGN • MANUFACTURE • SUPPLY

Display Accessories	
Part Number	**Description**
MBID-30FP	30 way FFC/FPC 0.5mm to 30 way JST 1mm crimp header
MDIB-CC1	Interconnect board for standard pitch pinouts to fine pitch wires. Providing pinouts for 2.54 pinout. 1.27, 1, 0.845, 0.8, 0.7, 0.65, 0.62, 0.6, 0.5 & 0.3 pads.

Optional Variants	
Appearances	**Voltage**

1. Handling Precautions

1) Since front polarizer is easily damaged, pay attention not to scratch it.
2) Be sure to turn off power supply when inserting or disconnecting from input connector.
3) Wipe off water drop immediately. Long contact with water may cause discoloration or spots.
4) When the panel surface is soiled, wipe it with absorbent cotton or other soft cloth.
5) Since the panel is made of glass, it may break or crack if dropped or bumped on hard surface.
6) Since CMOS LSI is used in this module, take care of static electricity and insure human earth when handling.
7) Do not open or modify the Module Assembly.
8) Do not press the reflector sheet at the back of the module to any directions.
9) At the insertion or removal of the Signal Interface Connector, be sure not to rotate nor tilt the Interface Connector of the TFT Module.
10) After installation of the TFT Module into an enclosure, do not twist nor bend the TFT Module even momentary. At designing the enclosure, it should be taken into consideration that no bending/twisting forces are applied to the TFT Module from outside. Otherwise the TFT Module may be damaged.

MIDAS DISPLAYS
DESIGN • MANUFACTURE • SUPPLY

2. General Description

2.1 Overview

This specification applies to the Color Active Matrix Liquid Crystal Display composed of a TFT-LCD display a LED backlight system. The screen format is intended to support UHD (3840(H) x2160(V)) screen and 1.07B colors.

2.2 Features

- High brightness display, 1000nits by LED backlight.
- edp (HBR2, 5.4Gbps) interface
- Long operation lifetime BLU design
- RoHS Compliance

2.3 Application

Industrial applications.

2.4 Display specifications

Items	Unit	Specification
Screen Diagonal	inch	23.8”
Active Area	mm	525.658 (H) X 299.7 (V)
Pixels H x V	pixels	3840 x3(RGB) x 2160
Pixels Pitch	um	136.89 (per one triad) x 136.89
Pixel Arrangement		RGB Vertical stripe
Display mode		Normally Black
White luminance (center)	Cd/m^2	1000 (Typ)
Contrast ratio		1200:1 (Typ.)
Optical Response Time	msec	14 ms (Typ. O525.658n/off)
Normal Input Voltage VDD	Volt	5.0
Power Consumption (Vcc Line + LED backlight)	Watt	68.4W (VDD line=8.4 W; LED lines= 60 W)
Weight	Grams	TBD
Physical size	mm	544.7 (W)×323.2 (H)×13.8 (D)
Electrical Interface		eDP
Support colors		1.07B colors
Surface Treatment		Anti-glare and hard-coating 3H
Temperature range Operating Storage	 ^0C ^0C	 -10 ~ 50 -20 ~ 60
RoHS Compliance		RoHS Compliance

MIDAS DISPLAYS
DESIGN • MANUFACTURE • SUPPLY

2.5 Optical characteristics

The following optical characteristics are measured under stable condition at 25 ^{0}C

Items	Unit	Conditions	Min.	Typ.	Max.	Note
Viewing angle	Deg.	Horizontal (Right)	85	89		2
		CR=10 (Left)	85	89		
		Vertical (Up)	85	89		
		CR=10 (Down)	85	89		
Contrast Ratio		Normal Direction	840	1200		3
Response Time	msec	Raising + Falling		14	25	4
Color / Chromaticity Coordinates (CIE)		Red x	-0.05	0.681	+0.05	5
		Red y		0.312		
		Green x		0.264		
		Green y		0.689		
		Blue x		0.152		
		Blue y		0.051		
Color coordinates (CIE) White		White x		0.313		
		White y		0.329		
Center Luminance	Cd/m^2		800	1000		6
Luminance Uniformity	%		70	75		7
Crosstalk (in 60 Hz)	%				1.5	
Flicker	dB				-20	

MiDAS DISPLAYS
DESIGN • MANUFACTURE • SUPPLY

Note 1: Measurement method

The LCD module should be stabilized at given temperature for 0.5 hour to avoid abrupt temperature change during measuring. In order to stabilize the luminance, the measurement should be executed after lighting Backlight for 1 hour in a windless room.

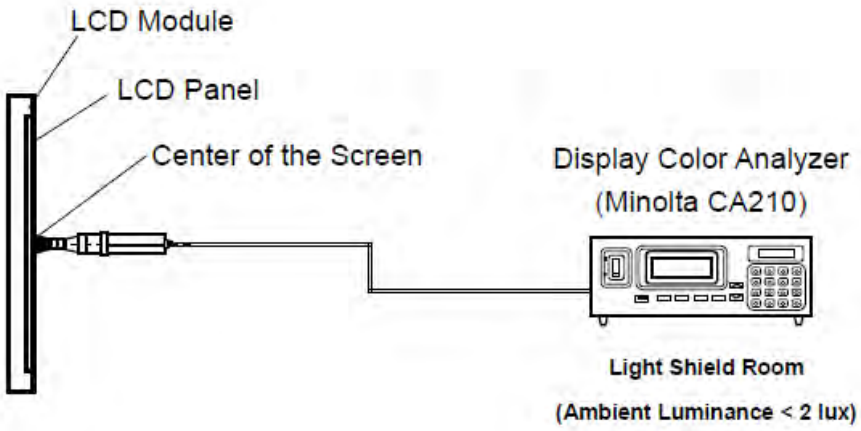

Note 2: Definition of viewing angle

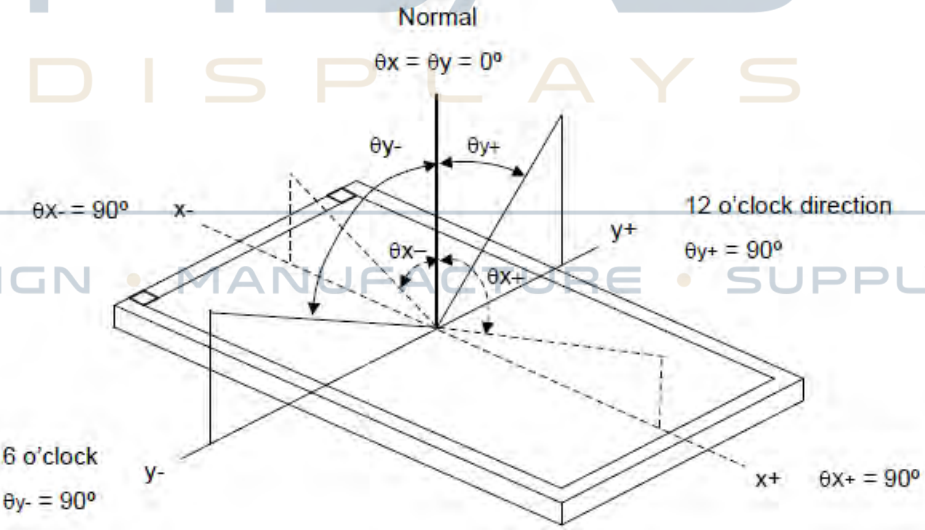

Note 3: Contrast ratio is measured by Minolta CA210

MiDAS DISPLAYS
DESIGN • MANUFACTURE • SUPPLY

Note 4: Definition of Response time

The output signals of photo detector are measured when the input signals are changed from “Full Black” to “Full White” (rising time), and from “Full White” to “Full Black” (falling time), respectively. The response time is interval between the 10% and 90% of amplitudes. Please refer to the figure as below.

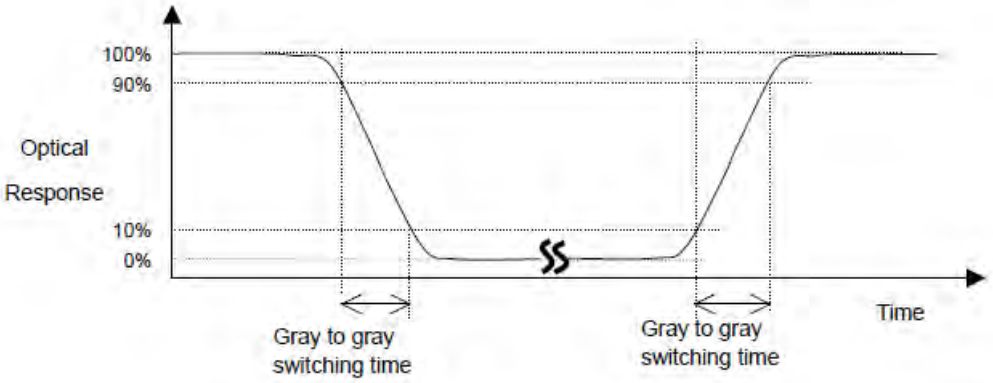

Note 5: Color chromaticity and coordinates (CIE) is measured by Minolta CA210

Note 6: Center luminance is measured by Minolta CA210

Note 7: Luminance uniformity of these 5 points is defined as below and measured by Minolta CA210

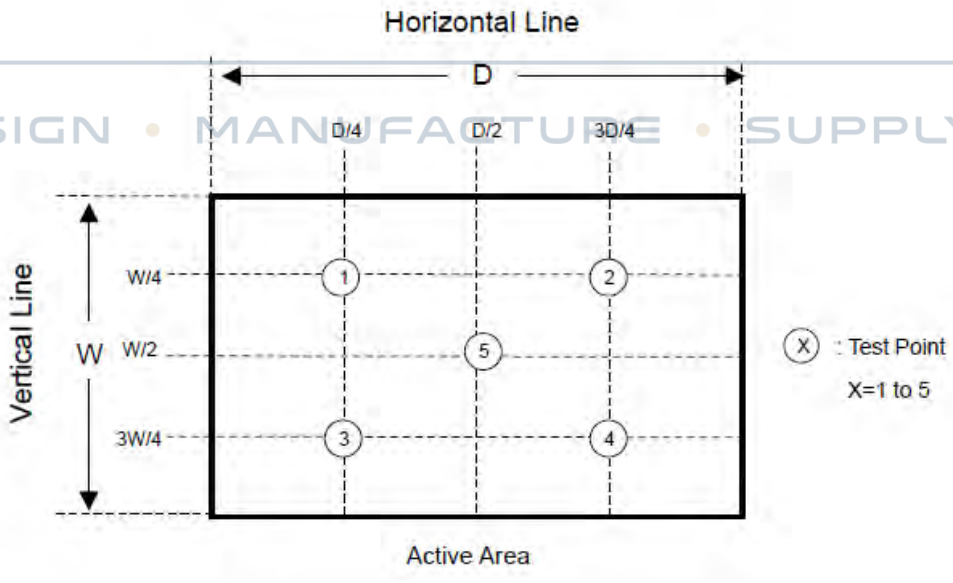

Uniformity = (Min. Luminance of 5 points) / (Max. Luminance of 5 points)

MiDAS DISPLAYS
DESIGN • MANUFACTURE • SUPPLY

3. Function block diagram

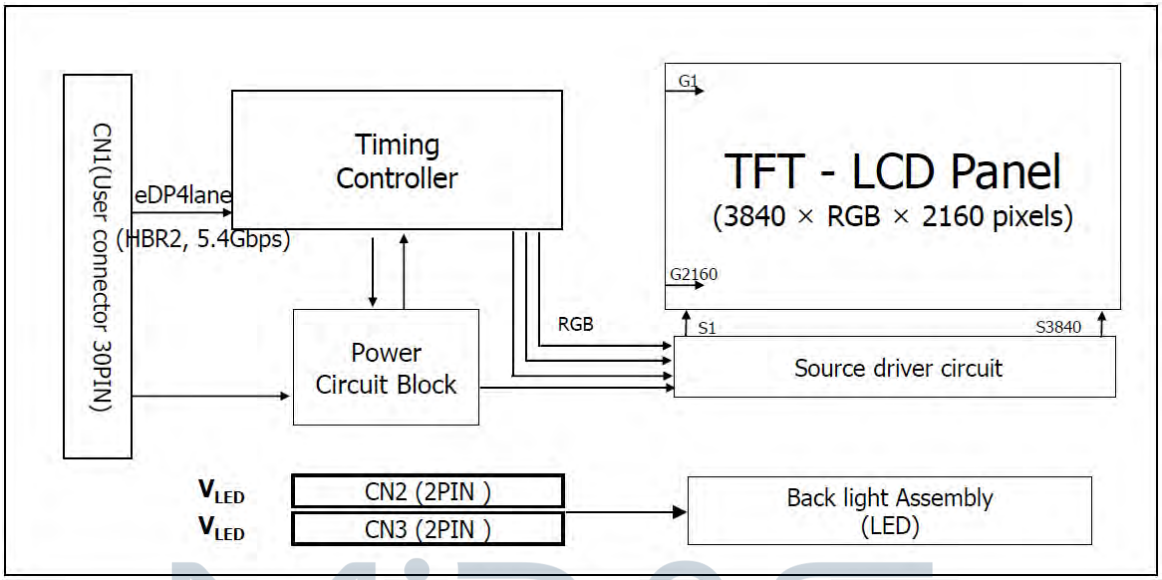

MiDAS DISPLAYS
DESIGN • MANUFACTURE • SUPPLY

4. Absolute Maximum Ratings

Absolute maximum ratings of the module are as following:

4.1 TFT LCD module

Items	Symbol	Min	Max	Unit	Conditions
Power supply voltage	V_{DD}	-0.3	12.0	Volt	Note 1, 2

4.2 Backlight unit

Items	Symbol	Min	Max	Unit	Conditions
LED bar input current			600	mA	

4.3 Environment

Items	Symbol	Values			Unit	Conditions
		Min.	Typ.	Max.		
Operation temperature	T_{OS}	-10	-	50	^{0}C	Note 3
Operation Humidity	H_{OP}	10		85	%	
Storage temperature	T_{ST}	-20		60	^{0}C	
Storage Humidity	H_{ST}	5		90	%	

Note 1: With in Ta= 25℃

Note 2: Permanent damage to the device may occur if exceed maximum values

Note 3: For quality performance, please refer to IIS (Incoming Inspection Standard).

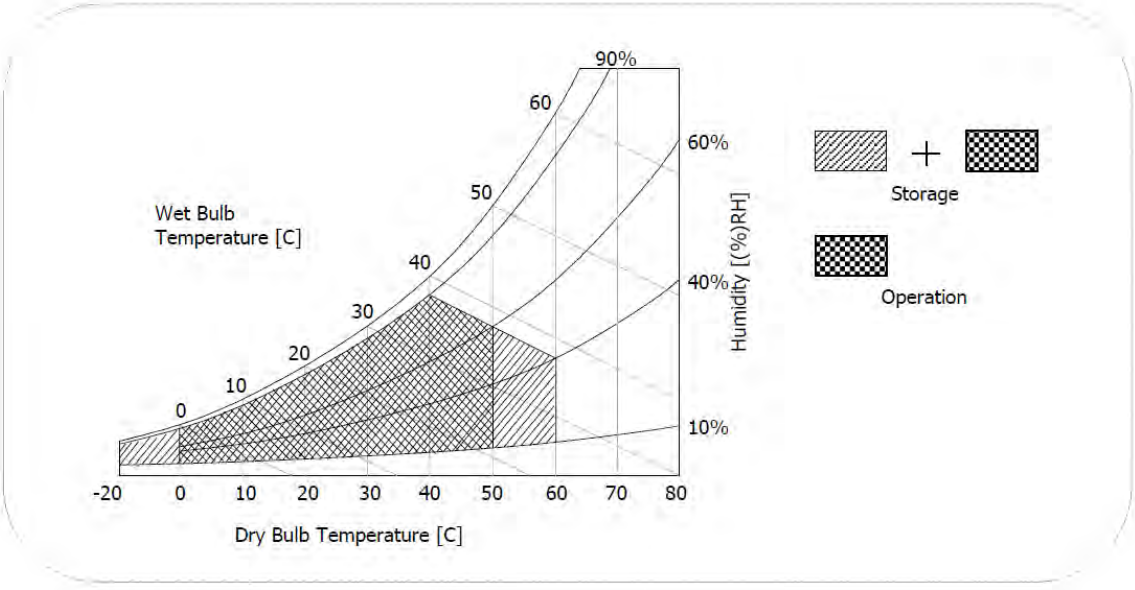

MiDAS DISPLAYS
DESIGN • MANUFACTURE • SUPPLY

5. Electrical characteristics

5.1 LCD electronics specification

Parameter	Symbol	Values			Unit	Notes
		Min	Typ	Max		
MODULE :						
Power Supply Input Voltage	V_{LCD}	9.5	10.0	10.5	Vdc	5
Permissive Power Input Ripple	V_{dRF}			400	mV_{p-p}	1
Power Supply Input Current	I_{LCD}	-	630	788	mA	2
		-	840	1050	mA	3
Power Consumption	$P_{C\ TYP}$	-	6.3	7.88	Watt	2
	$P_{C\ MAX}$	-	8.4	10.5	Watt	3
Rush current	I_{RUSH}	-		3	A	4

Note :

1. Permissive power ripple should be measured under the condition of V_{LCD}=10.0V, 25°C,* f_V=60Hz
   Refer to page 7 for the pattern and more information.

2. The specified current and power consumption can be measured under the V_{LCD}=10.0V, 25°C, f_V=60Hz and the pattern should be changed according to the typical or maximum power condition.
   The Max current can be measured only with the maximum power pattern.
   See the page 7 for details.

3. Maximum Condition of Inrush current :
   The duration of rush current is about 5ms and rising time of power Input is 500us ± 20%. (min.).

4. V_{LCD} level must be measured between two points on PCB of LCM (V_{LCD} (test point) ~ LCM Ground)
   (Test condition : maximum power pattern, 25°C, f_V=60Hz)

*fv=frame frequency

MIDAS DISPLAYS
DESIGN • MANUFACTURE • SUPPLY

• **Permissive Power input ripple** (V_{LCD} =10.0V, 25°C, fv (frame frequency)=MAX condition)

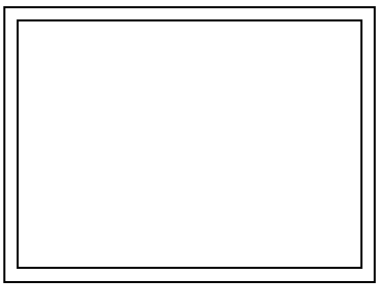

White pattern

For the exact ripple measurement, the condition of Max 20Mhz is recommended in the Bandwidth configuration of oscilloscope.

• **Power consumption** (V_{LCD} =10V, 25°C, fv (frame frequency=60Hz condition)

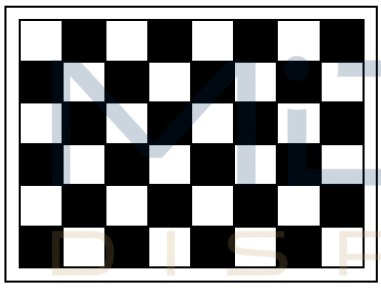

Typical power Pattern



Maximum power Pattern

FIG. 3 Mosaic pattern & White Pattern for power consumption measurement

MIDAS DISPLAYS
DESIGN • MANUFACTURE • SUPPLY

5.2 Backlight unit

Parameter	Min	Typ	Max	Unit	Note
LED voltage (VL)		36		[V]	2
LED current (IL)		420		[mA]	2
LED power (PL)		60		[W]	
LED lite time (MTBF)		50,000		[Hour]	1

Note 1: The “LED lift time” is defined as the module brightness decrease to 50% original brightness that the ambient temperature is 25℃ and typical LED Current at 420 mA

Note 2: The variance of LED Light Bar power consumption is ±10%. Calculator value for reference (IL × VL x 4 = PLED)

5.3 Interface connector

5.3.1 TFT connector(CN1)

- LCD Connector(CN1) : GT05Q-30S-H10-MN (LSMtron), HD2S030HA2 (JAE), KN38B-30S-0.5H(HIROSE) or Equivalent
- Mating Connector : 20453-030T-## (Manufactured by I-PEX) or Equivalent

No	Symbol	Description	No	Symbol	Description
1	VLCD	Power Supply +10.0V	16	Lane0P	True Signal for Main Link 0
2	VLCD	Power Supply +10.0V	17	Lane0N	Component Signal for Main Link 0
3	VLCD	Power Supply +10.0V	18	GND	Ground
4	VLCD	Power Supply +10.0V	19	Lane1P	True Signal for Main Link 1
5	VLCD	Power Supply +10.0V	20	Lane1N	Component Signal for Main Link 1
6	NC	No connection	21	GND	Ground
7	GND	Ground	22	Lane2P	True Signal for Main Link 2
8	NC	No Connection(I2C serial interface for LCM)	23	Lane2N	Component Signal for Main Link 2
9	NC	No Connection(I2C serial interface for LCM)	24	GND	Ground
10	GND	Ground	25	Lane3P	True Signal for Main Link 3
11	HPD	Hot Plug Detect Signal	26	Lane3N	Component Signal for Main Link 3
12	GND	Ground	27	GND	Ground
13	AUX_CHN	Component Signal for Auxiliary Channel	28	GND	Ground
14	AUX_CHP	True Signal for Auxiliary Channel	29	BL_EN	Enable signal for Backlight
15	GND	Ground	30	GND	Ground

Note: 1. All GND(ground) pins should be connected together and to Vss which should also be connected to the LCD's metal frame.
2. All VLCD (power input) pins should be connected together.
3. BL_EN (Enable signal for blacklight) : If you don't use this pin, it should be NC (No connection).

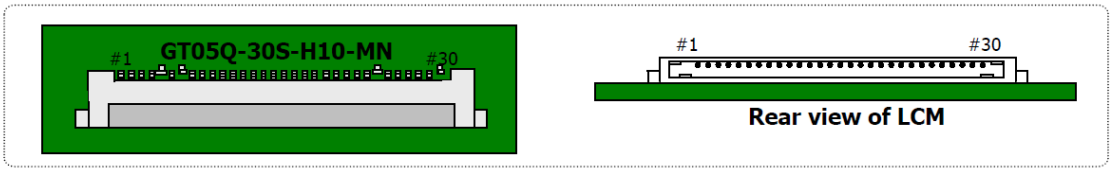

5.3.2 Backlight connector(CN2、3、4、5)

Recommended connector : JOIN TEK JT1025-1021 (BHSR-02VS-1 manufactured by JST)

Pin no	Symbol	I/O	Description	Remark
1	VLED+	P	Backlight LED anode	
2	VLED-	P	Backlight LED cathode	

DESIGN • MANUFACTURE • SUPPLY

6. eDP signal specification

6.1 eDP main link signal

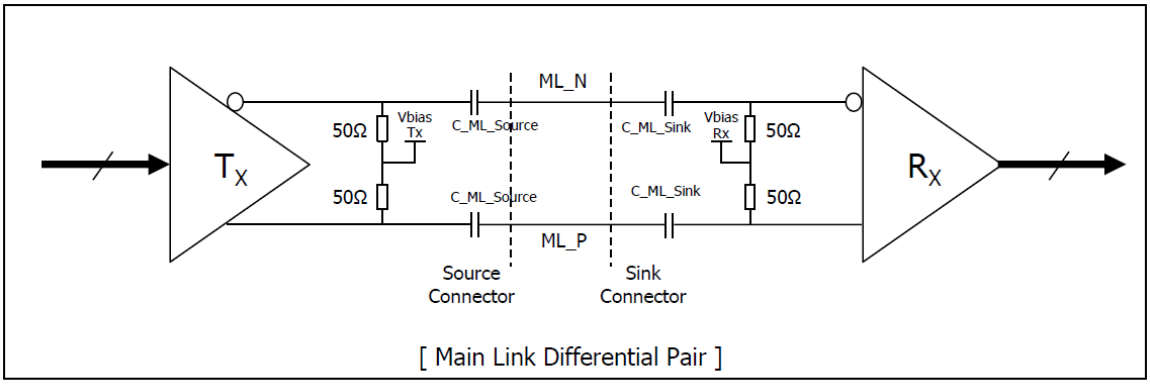

[Main Link Differential Pair]

Parameter	Symbol	Min	Typ	Max	Unit	Notes
Unit Interval for high bit rate (5.4Gbps / lane)	UI_HBR2	-	185	-	ps	
Link Clock Down Spreading	Amplitude	0	-	0.5	%	
	Frequency	30		33	kHz	
Maximum output voltage level at Source side connector	$V_{TX-DIFFp-p-Max}$	-	-	1.38	V	Note 6)
Differential peak-to-peak voltage at Sink side connector	$V_{RX-DIFFp-p}$	0.09	-	-	V	Note 7)
EYE width at Sink side connector	$T_{RX-EYE-CONN}$	0.38	-	-	UI	Note 6,7)
Lane intra-pair skew	$L_{Rx-SKEW-INTRA_PAIR}$	-	-	50	ps	
AC Coupling Capacitor	$C_{SOURCE-ML}$	75		200	nF	Source side

Note)

1. Termination resistor is typically integrated into the transmitter and receiver implementations.
2. In cabled embedded system, it is recommended the system designer ensure that EYE width and voltage are met at the sink side connector pins.
3. Mismatched common mode voltage will occur abnormal display.
4. All eDP electrical spec is measured at sink connector side.
5. eDP cable Impedance should be 100ohm ± 5%.

MIDAS DISPLAYS
DESIGN • MANUFACTURE • SUPPLY

Note6) Definition of Differential Voltage

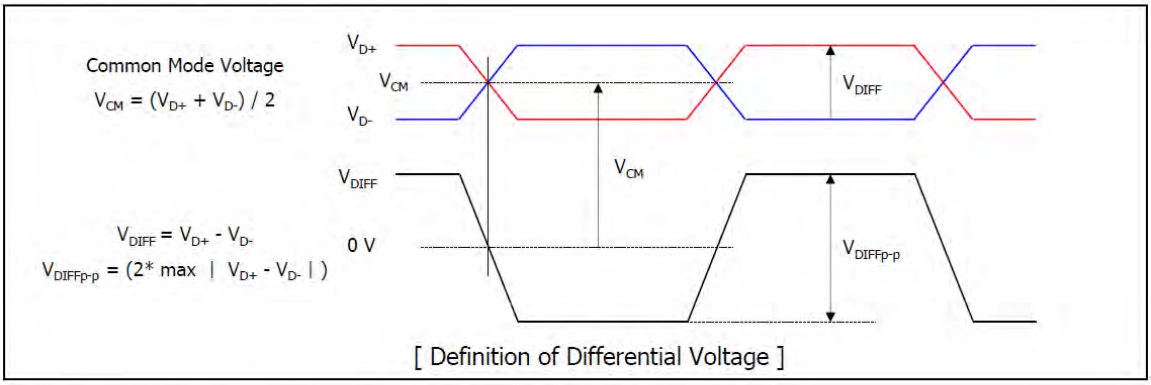

[Definition of Differential Voltage]

Note7) Main Link EYE Diagram

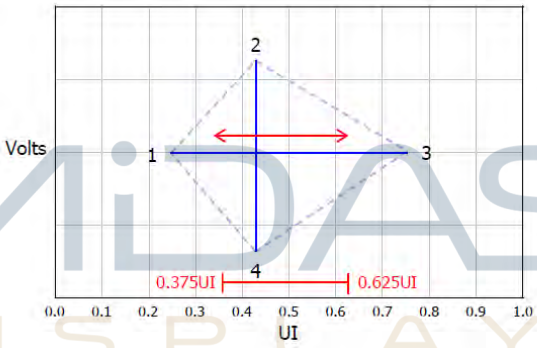

Point	High Bit Rate 2 @ TP3 EQ	
	Time(UI)	Voltage(V)
1	Any UI location (x) where the eye width is open from x to x+0.38UI	0.000
2	Any passing UI location between 0.375UI-0.625UI	0.045
3	Point 1 + 0.38UI	0.000
4	Same as Point 2	-0.045

[EYE Mask Vertices at embedded DP Sink Connector Pins]

MiDAS DISPLAYS
DESIGN • MANUFACTURE • SUPPLY

6.2 eDP AUX channel signal

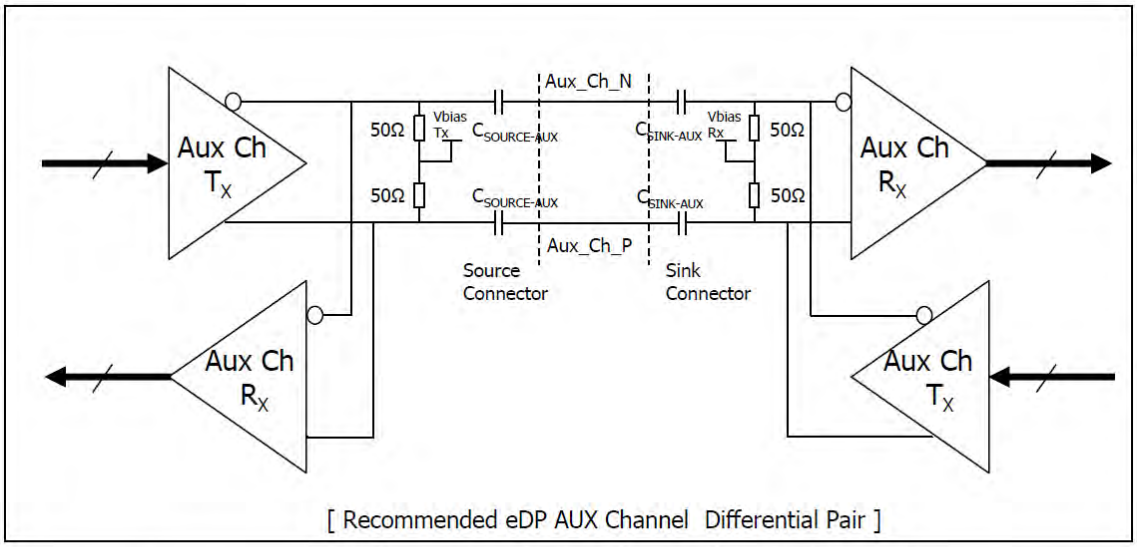

[Recommended eDP AUX Channel Differential Pair]

Parameter	Symbol	Min	Typ	Max	Unit	Notes
AUX Unit Interval	UI	0.4	-	0.6	us	
AUX Jitter at Rx IC Package Pins	T_{jitter}	-	-	0.05	UI	Equal to 30ns
AUX Peak-to-peak voltage at Connector Pins of Receiving	$V_{AUX-DIFFp-p}$	0.32	-	1.36	V	
AUX Peak-to-peak voltage at Connector Pins of Transmitting		0.39	-	1.38	V	
AUX EYE width at Connector Pins of Tx and Rx		0.98	-	-	UI	
AUX AC Coupling Capacitor	$C_{SOURCE-AUX}$	75		200	nF	Source side

Note)
1. Termination resistor is typically integrated into the transmitter and receiver implementations.
2. $V_{AUX-DIFFp-p} = 2^* \mid V_{AUXP}-V_{AUXN} \mid$
3. Termination resistor should be ±50ohm at source side to AUX level.
4. Mismatched common mode voltage will occur abnormal display.

MiDAS DISPLAYS DESIGN • MANUFACTURE • SUPPLY

6.3 eDP HPD signal

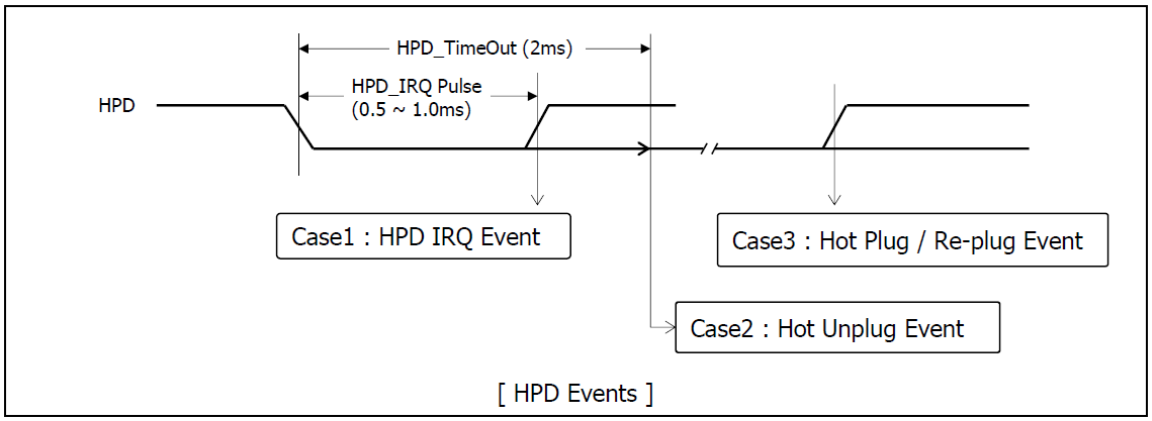

[HPD Events]

Parameter	Symbol	Min	Typ	Max	Unit	Notes
HPD Voltage	HPD	2.25	-	3.6	V	Sink side Driving
Hot Plug Detection Threshold		2.0	-	-	V	Source side Detecting
Hot Unplug Detection Threshold		-	-	0.8	V	
HPD_IRQ Pulse Width	HPD_IRQ	0.5	-	1.0	ms	
HPD_TimeOut		2.0	-	-	ms	HPD Unplug Event

Note)
1. HPD IRQ : Sink device wants to notify the Source device that Sink's status has changed so it toggles HPD line, forcing the Source device to read its Link / Sink Receiver DPCD field via the AUX-CH
2. HPD Unplug : The Sink device is no longer attached to the Source device and the Source device may then disable its Main Link as a power saving mode
3. Plug / Re-plug : The Sink device is now attached to the Source device, forcing the Source device to read its Receiver capabilities and Link / Sink status Receiver DPCD fields via the AUX-CH

MIDAS DISPLAYS
DESIGN • MANUFACTURE • SUPPLY

7. Signal timing specifications

This is signal timing required at the input of the TMDS transmitter. All of the interface signal timing should be satisfied with the following specifications for it's proper operation.

ITEM		SYMBOL	Min	Typ	Max	Unit	Note
DCLK	Period	tCLK	1.82	1.875	1.93	ns	
	Frequency	fCLK	518.25	533.25	548.25	MHz	-
Hsync	Period	tHP	3968	4000	4032	tCLK	1,2,3,4
	Width-Active	tWH	28	32	36		
Vsync	Period	tVP	2220	2222	2268	tHP	2,4 ※Adaptive sync :40~60Hz
	Frequency	fV	58.2	59.997	61.68	Hz	
	Width-Active	tWV	5	5	5	tHP	
Data Enable	Horizontal Valid	tHV	3840	3840	3840	tCLK	1,2,3,4
	Horizontal Back Porch	tHBP	52	80	108		
	Horizontal Front Porch	tHFP	48	48	48		
	Horizontal Blank	-	128	160	192		tWH+ tHBP+ tHFP
	Vertical Valid	tVV	2160	2160	2160	tHP	2,4
	Vertical Back Porch	tVBP	52	54	100		
	Vertical Front Porch	tVFP	3	3	3		
	Vertical Blank	-	60	62	108		tWV+ tVBP+ tVFP

Notes :

1. The value of Hsync period, Hsync width and Hsync valid should be even number times of tCLK.
   If the value is odd number times of tCLK, it can make asynchronous signal timing and cause abnormal display.
2. The performance of the electro-optical characteristics may be influenced by variance of the vertical refresh rates.
3. The value of Hsync Period, Hsync Width, and Horizontal Back Porch should be divided by 4 without a remainder.
4. The polarity of Hsync, Vsync is not restricted.

※ This panel supports adaptive sync timing(40~60Hz) only under moving picture in room temperature(25±5℃).

-It would not work usually under still image & reliability test.

Under those condition, the phenomenon such as image sticking and flickering could be found on the screen.

MIDAS DISPLAYS DESIGN • MANUFACTURE • SUPPLY

8. Signal timing waveforms

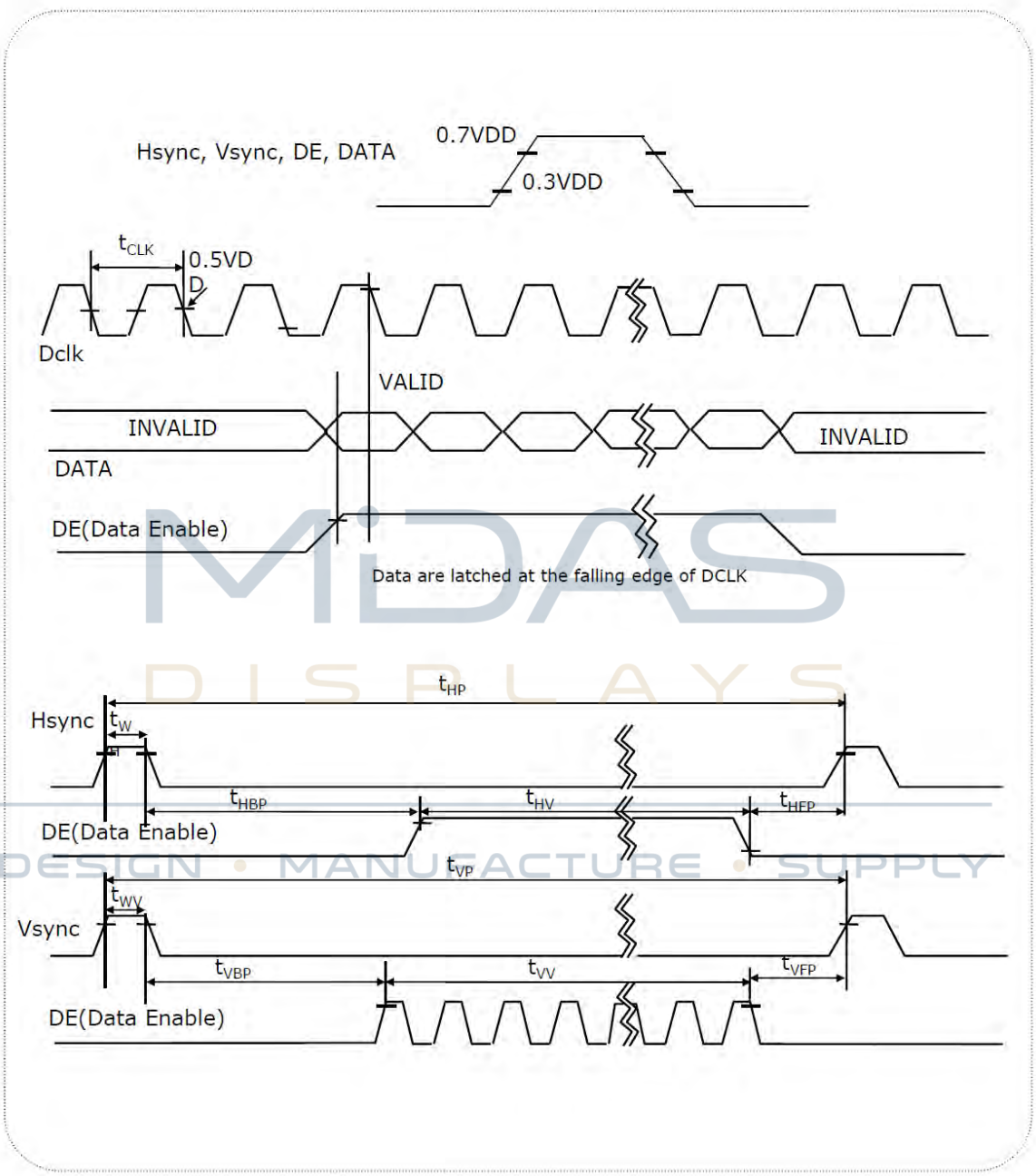

MDAS DISPLAYS
DESIGN • MANUFACTURE • SUPPLY

9. Color input data reference

The Brightness of each primary color(red,green,blue) is based on the 10-bit gray scale data input for the color; the higher the binary input, the brighter the color. The table below provides a reference for color versus data input.

Color		Input Color Data		
		RED MSB LSB	GREEN MSB LSB	BLUE MSB LSB
		R9 R8 R7 R6 R5 R4 R3 R2 R1 R0	G9 G8 G7 G6 G5 G4 G3 G2 G1 G0	B9 B8 B7 B6 B5 B4 B3 B2 B1 B0
Basic Color	Black	0 0 0 0 0 0 0 0 0 0	0 0 0 0 0 0 0 0 0 0	0 0 0 0 0 0 0 0 0 0
	Red (1023)	1 1 1 1 1 1 1 1 1 1	0 0 0 0 0 0 0 0 0 0	0 0 0 0 0 0 0 0 0 0
	Green (1023)	0 0 0 0 0 0 0 0 0 0	1 1 1 1 1 1 1 1 1 1	0 0 0 0 0 0 0 0 0 0
	Blue (1023)	0 0 0 0 0 0 0 0 0 0	0 0 0 0 0 0 0 0 0 0	1 1 1 1 1 1 1 1 1 1
	Cyan	0 0 0 0 0 0 0 0 0 0	1 1 1 1 1 1 1 1 1 1	1 1 1 1 1 1 1 1 1 1
	Magenta	1 1 1 1 1 1 1 1 1 1	0 0 0 0 0 0 0 0 0 0	1 1 1 1 1 1 1 1 1 1
	Yellow	1 1 1 1 1 1 1 1 1 1	1 1 1 1 1 1 1 1 1 1	0 0 0 0 0 0 0 0 0 0
	White	1 1 1 1 1 1 1 1 1 1	1 1 1 1 1 1 1 1 1 1	1 1 1 1 1 1 1 1 1 1
RED	RED (000)	0 0 0 0 0 0 0 0 0 0	0 0 0 0 0 0 0 0 0 0	0 0 0 0 0 0 0 0 0 0
	RED (001)	0 0 0 0 0 0 0 0 0 1	0 0 0 0 0 0 0 0 0 0	0 0 0 0 0 0 0 0 0 0
	...	...	...	...
	RED (1022)	1 1 1 1 1 1 1 1 1 0	0 0 0 0 0 0 0 0 0 0	0 0 0 0 0 0 0 0 0 0
	RED (1023)	1 1 1 1 1 1 1 1 1 1	0 0 0 0 0 0 0 0 0 0	0 0 0 0 0 0 0 0 0 0
GREEN	GREEN (000)	0 0 0 0 0 0 0 0 0 0	0 0 0 0 0 0 0 0 0 0	0 0 0 0 0 0 0 0 0 0
	GREEN (001)	0 0 0 0 0 0 0 0 0 0	0 0 0 0 0 0 0 0 0 1	0 0 0 0 0 0 0 0 0 0
	...	...	...	...
	GREEN (1022)	0 0 0 0 0 0 0 0 0 0	1 1 1 1 1 1 1 1 1 0	0 0 0 0 0 0 0 0 0 0
	GREEN (1023)	0 0 0 0 0 0 0 0 0 0	1 1 1 1 1 1 1 1 1 1	0 0 0 0 0 0 0 0 0 0
BLUE	BLUE (000)	0 0 0 0 0 0 0 0 0 0	0 0 0 0 0 0 0 0 0 0	0 0 0 0 0 0 0 0 0 0
	BLUE (001)	0 0 0 0 0 0 0 0 0 0	0 0 0 0 0 0 0 0 0 0	0 0 0 0 0 0 0 0 0 1
	...	...	...	...
	BLUE (1022)	0 0 0 0 0 0 0 0 0 0	0 0 0 0 0 0 0 0 0 0	1 1 1 1 1 1 1 1 1 0
	BLUE (1023)	0 0 0 0 0 0 0 0 0 0	0 0 0 0 0 0 0 0 0 0	1 1 1 1 1 1 1 1 1 1

MIDAS DISPLAYS
DESIGN · MANUFACTURE · SUPPLY

10. Power sequence

10.1 Power sequence

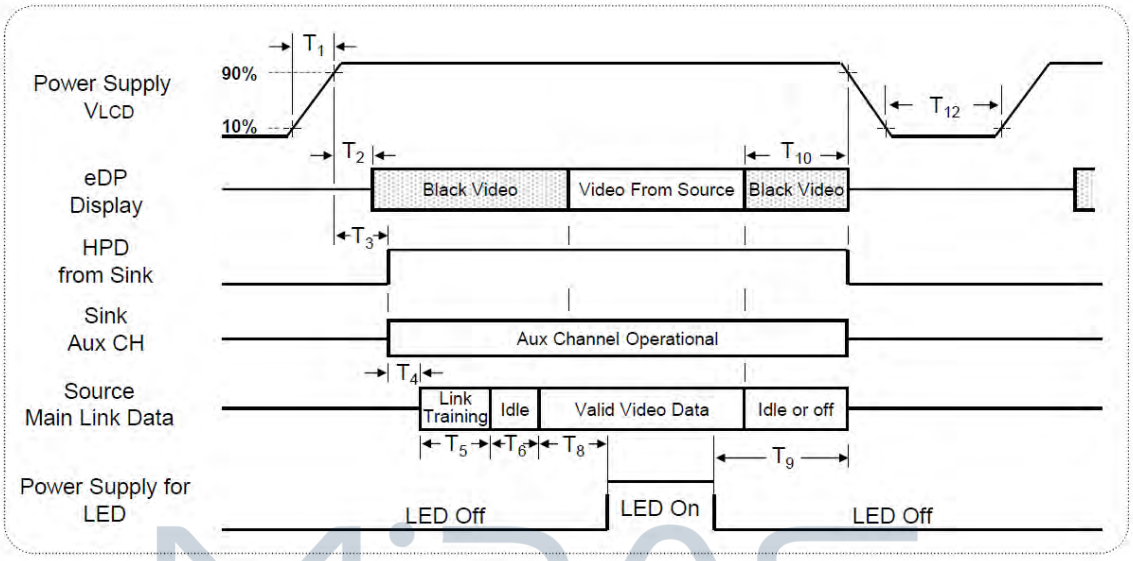

Timing	Required By	Limits		Units	Notes
		Min	Max		
T_1	Source	0.5	10	ms	-
T_2	Sink	10	200	ms	-
T_3	Sink	15	200	ms	-
T_4	Source	-	-	ms	Note 5)
T_5	Source	-	-	ms	Note 5)
T_6	Source	-	100	ms	Note 6)
T_8	Source	200	-	ms	-
T_9	Source	200	-	ms	Note 4)

Timing	Required By	Limits		Units	Notes
		Min	Max		
T_{10}	Source	0	500	ms	-
T_{12}	Source	1000	-	ms	-

Note:

1. Power sequence should be kept all the time including below cases for normal operation.
   -.AC/DC Power On/Off
   -.Mode change (resolution, frequency, timing, sleep mode, color depth change, etc.)
   The violation of power sequence can cause a significant trouble in display and reliability.
2. Please avoid floating state of interface signal during signal invalid period.
3. When the interface signal is invalid, be sure to pull down the VLCD.(0V)
4. Please turn off the power supply for LED when the level of V_{LCD} changes to prevent noise issue.
5. Link training duration is dependent on the customer's system.
6. It includes Source Frame Synchronization time.
   Source Frame Synchronization: Time to prepare before Tx(Source) sends valid data(Invalid period)

MIDAS DISPLAYS
DESIGN • MANUFACTURE • SUPPLY

10.2 V_{LCD} power dip condition

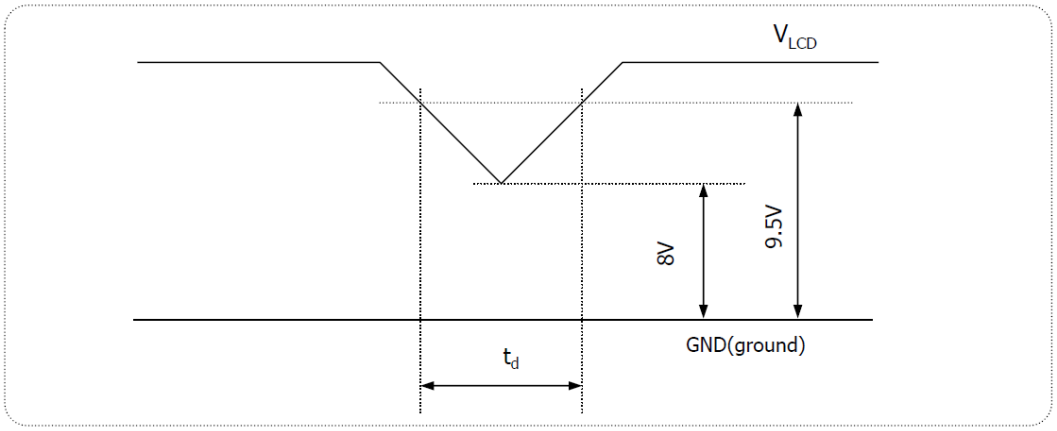

For proper operation, stable power supply of V_{LCD} is necessary and power dip is allowed only in below condition.
Except this condition, power on/off should follow power sequence specification in page 18 exactly.

1) Dip condition

$8V \leq V_{LCD} < 9.5V$, $t_d \leq 20ms$

MiDAS DISPLAYS
DESIGN • MANUFACTURE • SUPPLY

11. Reliability Test

Environment test conditions are listed as following table.

Items	Required Condition	Note
Temperature Humidity Bias (THB)	Ta=40℃, 80%RH, 240hours	
High Temperature Operation (HTO)	Ts= 50℃, 240hours	3
Low Temperature Operation (LTO)	Ta= -10℃, 240hours	
High Temperature Storage (HTS)	Ta= 60℃, 240hours	
Low Temperature Storage (LTS)	Ta= -20℃, 240hours	
Thermal Shock Test (TST)	-20℃/30min, 60℃/30min, 100 cycles	
On/Off Test	On/10sec, Off/10sec, 30,000 cycles	
ESD (ElectroStatic Discharge)	Contact Discharge: ± 8KV, 150pF(330Ω) 1sec, 9 points, 25 times/ point.	
	Air Discharge: ± 15KV, 150pF(330Ω) 1sec 9 points, 25 times/ point.	

Note 1: The TFT-LCD module will not sustain damage after being subjected to 100 cycles of rapid temperature change. A cycle of rapid temperature change consists of varying the temperature from -10℃ to 50℃, and back again. Power is not applied during the test. After temperature cycling, the unit is placed in normal room ambient for at least 4 hours before power on.

Note 2: According to EN61000-4-2 , ESD class B: Some performance degradation allowed. No data lost. Self-recoverable. No hardware failures.

Note 3: TFT surface.

MiDAS DISPLAYS
DESIGN • MANUFACTURE • SUPPLY

13. Mechanical Characteristics

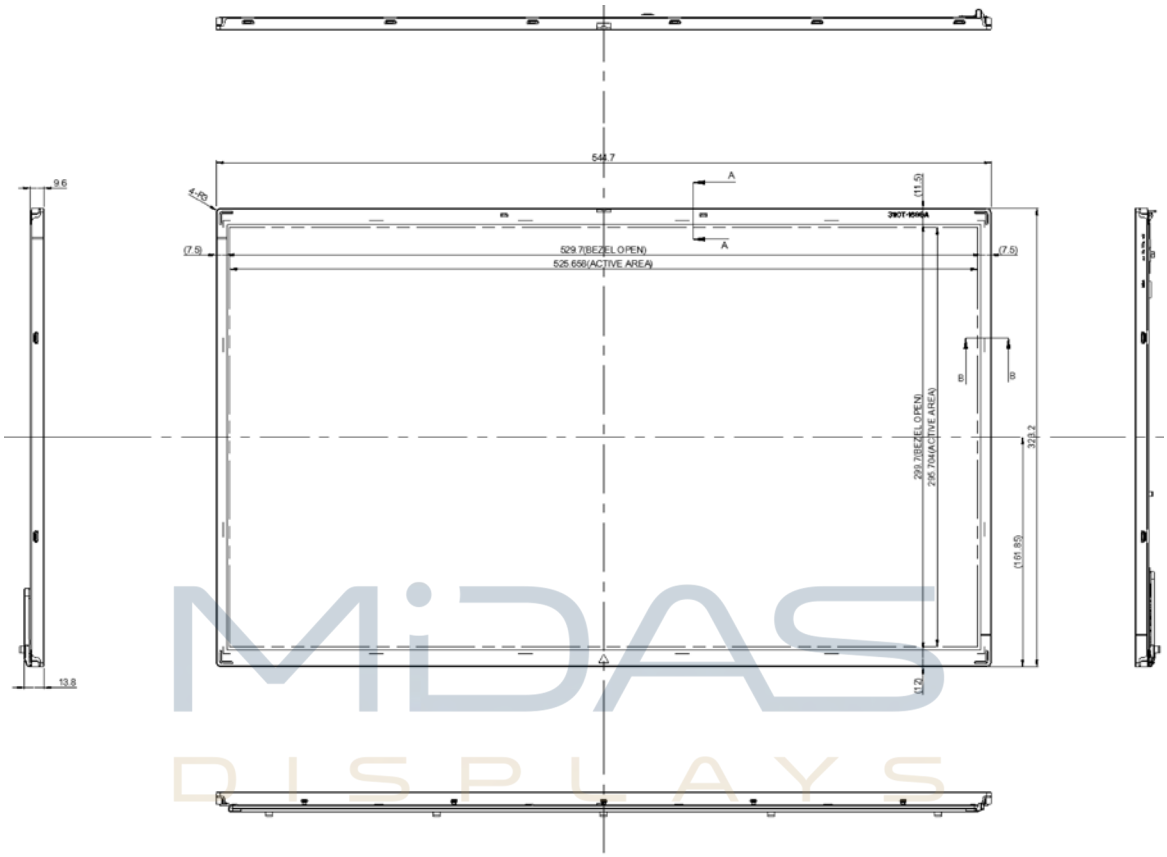

MiDAS DISPLAYS
DESIGN • MANUFACTURE • SUPPLY

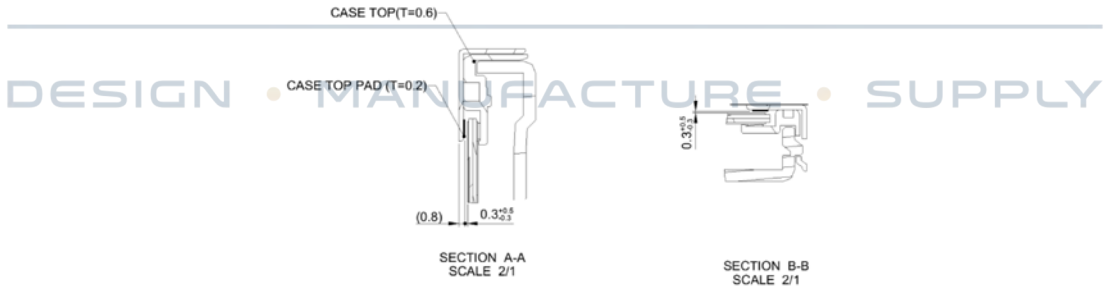

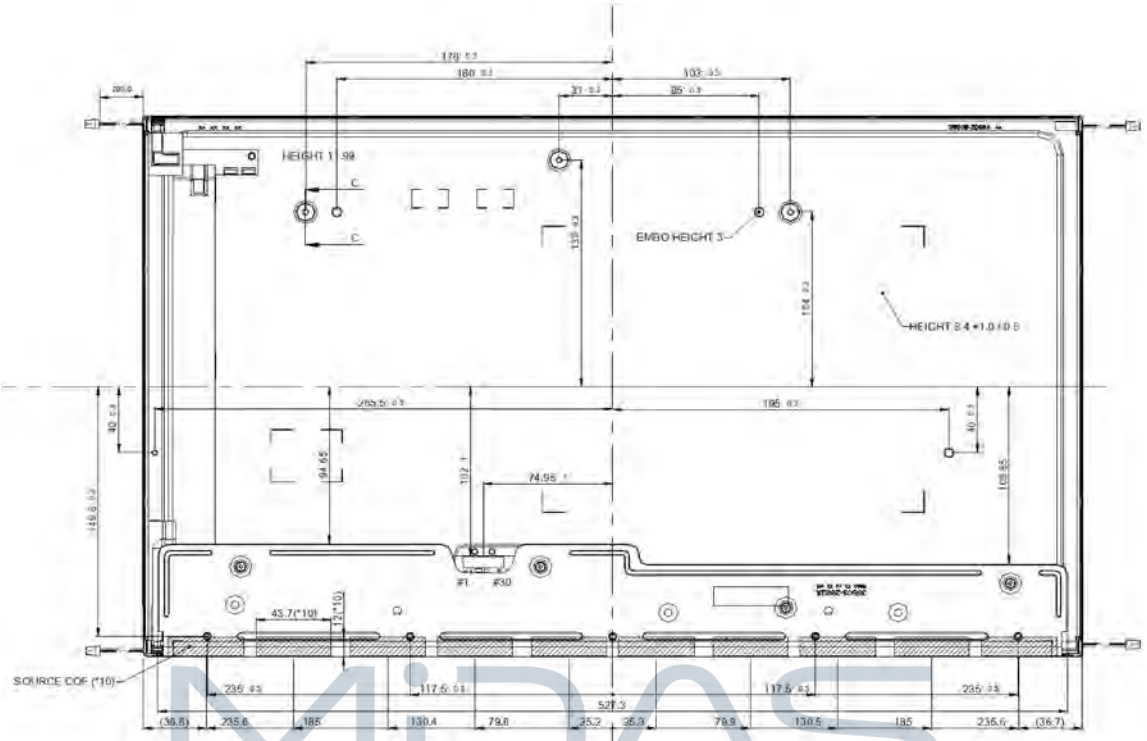



SECTION C-C
SCALE 2/1

Notes
1. Unspecified tolerances are to be ± 0.5
2. Tilt and partial disposition tolerance of display area are as following
(1) Y-direction : | A-B | ≤ 1.4
(2) X-direction : | C-D | ≤ 1.4



3. Torque SPEC of Mounting : 3.0 ~4.0kgf.cm, M3.0 Machine Screw
4. I/F Connector Specification(CN1) : GT05Q-30S-H10-MN(LSMtron) or Equivalent
5. The COF area is week & sensitive, so please don't press the COF area
6. The LCM warp(warpage) is less than 1.0 on the surface plate
7. Undifined height should follow the 3D modeling data

MIDAS DISPLAYS
DESIGN • MANUFACTURE • SUPPLY